VEGA RS8

USER MANUAL

PRODUCT CODE

MS03010010

SERIAL NUMBER

MD CE

CareCo

1 Turing Court, Great Notley, Great Notley,
Braintree, CM77 7AT

CONTENTS

1. INTRODUCTION 3

2. IMPORTANT PRECAUTIONS 4

3. IDENTIFICATION OF PARTS 10

4. OPERATING YOUR SCOOTER 12

5. CHARGING THE BATTERIES 16

6. CARE AND MAINTENANCE 18

7. OTHER INFORMATION 20

8. TROUBLE SHOOTING 21

9. OPTIONS 22

10. TECHNICAL SPECIFICATIONS 23

1. INTRODUCTION

Thank you and congratulations on purchasing your new Vega RS8 mobility scooter.

It is designed to provide the transportation ability indoors and outdoors for person whose ability to walk is impaired, but who are still in terms of their eyesight and physically and mentally able to operate an electric scooter.

We pride ourselves on providing safe and comfortable products. Our goal is to ensure your complete satisfaction. We sincerely hope you enjoy your Vega RS8 mobility scooter.

Please read and observe all warnings and instructions provided in owner's manual before your operate the various functions of this scooter. Also, please retain this booklet for future reference.

If you have any question, please contact:

Careco UK Limited,

1 Turing Court, Great Notley, Braintree, CM77 7AT
Tel: 0333 015 500
E-Mail: cs@careco.co.uk
Visit: www.CareCo.com

Information of European Representative:

MedNet EC-REP GmbH
Borkstrasse 10,
48163 Muenster,
Germany

CareCo (UK) Limited,
1 Turing Court, Great Notley,
Braintree, CM77 7AT

UKRP MediMap Ltd, 2 The Drift,
Thurston, Suffolk, IP31 3RT

UK CA MD CE

2. IMPORTANT PRECAUTIONS

2.1 BEFORE DRIVING FOR THE FIRST TIME

- Before take the first trip with mobility scooter, you should familiarize yourself well the operation of mobility scooter and with the operation elements. Please take your time to read this introduction booklet.
- Before driving, please evaluate the personal condition, and fully understand the operation of mobility scooter.
- You should not assemble, maintain, and operate the mobility scooter before you read this instruction booklet.
- Observe and obey all pedestrian rules and regulations in which you are riding.
- Mobility device may only be used on the traffic routes for which it is approved in accordance with the relevant national legislation.
- Always be aware of pedestrians and situations which might require extra care when using your scooter on public walk ways and footpaths.
- Do not drive your scooter if you are under the influence of alcohol or medication that may affect your ability.
- Try not to drive scooter at night.
- Turn the key off before getting on or off. (see section 4-1 General Operation)

Please observe all relevant rules and regulations pertaining to pedestrians and road users, at all times when you are driving the scooter.

- Do not turn the power on before you get in and sit securely on the seat.
- Be certain that the power is turned off when get in, get out. This will eliminate the possibility of accidentally activating the wigwag controls and causing injury.
- Keep your weight toward the middle of the deck. Putting most or all of your weight on the edge of the deck may cause an unstable condition.
- Only one person at a time could ride a Vega RS8 Mobility Scooter. Do not carry passengers under any circumstances.

Practice Tips

- If you are new to driving a scooter, it is a good idea to practice in a clear, safe space on a sound level surface. (I.e. Park, Playground).
- Basic functions to practice: Wig wag accelerate /Wig wag release /Stop /Reverse /Turn /Ramp proceeding.
- Set the speed control to its lowest speed, slightly increase the speed when you are getting familiar with the scooter. (see section 4-1 for speed Dial Knob)

Practice operating your scooter in the presence of an attendant. Remember that only with practice will you become a competent driver. Practice these basic functions until you feel that you have control of your scooter.

2.2 CAUTIONS WHEN DRIVING

- Please do the daily check before your journey always. (Refer to 6-1 Daily check.)
- Do not extend your body over the mobility scooter.
- Please make sure your safety when crossing the level crossing.
- When crossing the level crossing, please be aware of the wheel and rail are perpendicular.
- Do not use the mobile phone and wireless mobile devices.
- Do not use the batteries of mobility scooter to charge any other electric devices, except the accessories from original manufacturer.
- Do not drive on a slope which is over the limit. (Refer to 2-4 Caution When Driving)
- Reduce speed when descending to prevent any danger. Increase speed when ascending
- Do not drive to across the obstacle over the limit (Refer to 2-5 Caution When Climbing)
- Do not attempt to drive the scooter in rain, wet grass, or any other potentially hazardous condition.
- Ensure that the lights of scooter are turned on while driving at night or in poor visibility.
- Please stop operating the scooter if the batteries have drained, continuous operation may damage the scooter.

- Always follow the local pedestrian traffic rules when riding outside.
- When turning, reduce your speed and maintain a stable centre of gravity. This greatly reduces the possibility of a tip or fall.

- Do not turn off the power while driving.
- Do not stretch your body out on the scooter. For maximum stability, lean forward in your body while proceeding up ramps, inclines, curbs, or any low rise.
- Do not attempt to have your scooter climb or descend an obstacle that is inordinately high. This may cause the scooter to tip.
- Do not attempt to use your scooter on an escalator.
- Do not make sharp turns while driving. This may cause the scooter to tip.
- Never place the scooter in freewheel mode when on any sort of an incline or decline. When the scooter is parked, the lever for engaging and disengaging the motors must be locked firmly into the “DRIVE” position. (Refer to section 4-2)
- Cross the railroad crossing, make sure the wheels pass the rail at 90degree angles, avoid scooter stuck on railroad.

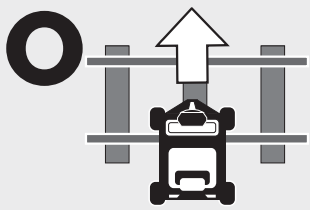

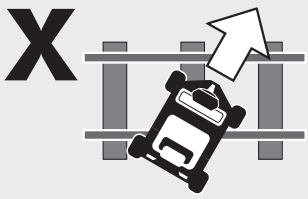

- When descending an incline, use the slowest speed possible. If the descent is faster that you desire, release the throttle lever to stop the scooter. Then press the throttle lever slightly to control the speed.

2.3 GENERAL SAFETY INFORMATION FOR SCOOTER

- Batteries should be fully charged before using for maximum performance and longevity. (see section 5-2)
- The maximum load of the scooter is 136KG . Do not exceed the maximum permissible load. Exceeding the max. weight rating may result in injury to yourself.
- The maximum load of the front basket is 3KG, exceeding the max. weight may result damage to basket.
- The mobility device is only designed for use by a single occupant whose maximum weight does not exceed the maximum permissible load of the device. Never use the mobility device to transport more than one person (including children).
- Do not attempt to carry out maintenance work that is not described in this user manual.
- Do not change, modify, remove any parts from products especially safety protected parts such as anti-tips.
- Completely deflate the tyres (air tyres) before dismantling the rim or attempting.

- Materials and assemblies of scooter is flame resistant.
- Avoid exposure the scooter to rain, snow, ice, salt, or standing water whenever possible. Maintain and store in a clean and dry condition. Any direct contact with water can cause damage to the scooter and electrical system.
- Do not remove the anti-tip wheels or modify your scooter in any way that is not authorized.
- Only use the chargers, accessories, or components supplied as original equipment with your scooter supplier.
- Immediately stop using the scooter if you encounter a problem with scooter. Turn off the power and contact dealer for further checking.
- Please pay more attention when driving the scooter, the emergency stop may encounter passengers under any circumstances.

2.4 CAUTIONS WHEN DRIVING ON INCLINES

- The scooter has been rated to a maximum climbable height, obstacle height, and gap. (Refer to 9 Section Specifications)
- Never drive on a slope that exceeds the rated slope.
- The weight capacity limit at different ramp degree (please refer to following picture).

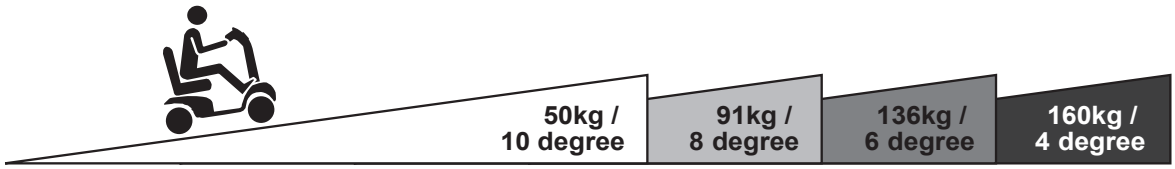

- Your scooter's ability to travel up inclines is affected by your weight, your scooter's speed, your angle of approach to the incline, and your scooter setup.
- Please avoid to drive on a long ramp or any uneven terrain to prevent any danger from motor defected.
- The batteries voltage normally will go up when driving on descending road. If the battery voltage becomes too high, the over-voltage protection will be activated by slowing the speed till the scooter stops. (error code :ERR3 will be displaying). Please pull over the scooter to the safe area, release the wigwags and restart the scooter again.

- When driving down a ramp or uneven terrain, keep the scooter's speed adjustment set to the slowest speed setting to ensure a safely controlled driving.
- If the speed is too fast, release the throttle control lever, let the scooter stop. When you feel that you again have control of your scooter, push the throttle control lever forward and continue safely driving. To prevent any danger, do not turn around at high speed on ascending, descending ramp.

2.5 CAUTIONS WHEN CLIMBING

- The maximum height of obstacle and curb that scooter can climb is up to 5 cm (A).
- The maximum gap that scooter can drive over is 17 cm (B).
- When driving scooter on ramp, adjust body centre of gravity for scooter stability.

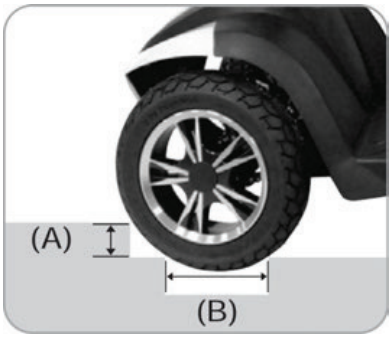

Figure 1

Even though your scooter has been rated with maximum climbable, we suggest not to drive through an obstacle which is higher than 5 cm.

2.6 ELECTROMAGNETIC INTERFERENCE AND WARNINGS

It is very important that you read this information regarding the possible effects of Electromagnetic Interference on your mobility scooter.

Mobility scooters may be susceptible to electromagnetic interference (EMI), which is interfering electromagnetic energy (EM) emitted from sources such a radio stations, TV stations, amateur radio (HAM) transmitters, two-way radios, and mobile phones. The interference (from radio wave sources) can cause the mobility scooter to release its brakes, move by itself, or move in unintended directions. It can also permanently damage the mobility scooter control system. The intensity of the interfering EM energy can be measured in volts per meter (V/m). Each mobility scooter can resist EMI up to certain intensity. This is called its "immunity level." The higher the immunity level, the greater the protection. At this time, current technology is capable of achieving at least a 20 V/m immunity level, which would provide useful protection from the more common sources of radiated EMI. The immunity level of this mobility scooter model is not known.

There are a number of sources of relatively intense electromagnetic fields in the everyday environment. Some of these sources are obvious and easy to avoid. Others are not apparent and exposure is unavoidable. However, we believe that by following the warnings listed below, your risk to EMI will be minimized.

The sources of radiated EMI can be broadly classified into three types:

1. Hand-held portable transceivers (transmitters-receivers) with the antenna mounted directly on the transmitting unit. Examples include: citizens band (CB) radios, “walkie talkie,” security, fire, and police transceivers, mobile phones, and other personal communication devices.

Some mobile phones and similar devices transmit signals while they are ON, even when not being used

2. Medium-range mobile transceivers, such as those used in police cars, fire trucks, ambulances, and taxis. These usually have the antenna mounted on the outside of the vehicle; and
3. Long-range transmitters and transceivers such as commercial broadcast transmitters (radio and TV broadcast antenna towers) and amateur (HAM) radios.

Other types of hand-held devices, such as cordless phones, laptop computers, AM/FM radios, TV sets, CD players, and cassette players, and small appliances, such as electric shavers and hair dryers, so far as we know, are not likely to cause EMI problems to your mobility scooter.

Mobility Scooter Electromagnetic Interference:

Because EM energy rapidly becomes more intense as one move closer to the transmitting antenna (source), the EM fields from hand-held radio wave sources (transceivers) are of special concern. It is possible to unintentionally bring high levels of EM energy very close to the motorized scooter control system while using these devices. This can affect mobility scooter movement and braking. Therefore, the warnings listed below are recommended to prevent possible interference with the control system of the mobility scooter.

Warnings:

Electromagnetic interference (EMI) from sources such as radio and TV stations, amateur radio (HAM) transmitters, two-way radios, and mobile phones can affect mobility scooters. Following the warnings listed below should reduce the chance of unintended brake release or mobility scooter movement which could result in serious injury.

1. Do not operate hand-held transceivers (transmitters-receivers), such as citizens band (CB) radios, or turn ON personal communication devices, such as mobile phones, while the mobility scooter is turned ON;
2. Be aware of nearby transmitters, such as radio or TV stations, and try to avoid coming close to them;
3. If unintended movement or brake release occurs, turn the mobility scooter OFF as soon as it is safe;
4. Be aware that adding accessories or components, or modifying the mobility scooter, may make it more susceptible to EMI; and

There is no easy way to evaluate their effect on the overall immunity of the mobility scooter.

5. Report all incidents of unintended movement or brake release to the distributor listed on the inside front cover of this manual. Note whether there is a source of EMI nearby.

2. IMPORTANT PRECAUTIONS

Important Information:

1. 20 volts per meter (V/m) is a generally achievable and useful immunity level against EMI (as of May 1994). The higher the level, the greater the protection.
2. The immunity level of this product is at least 20/Vm.

2.7 SAFETY WARNING AND INSTRUCTION LABELS

1	Warning Sticker 1. Please read the instruction booklet carefully before using your scooter. 2. Do not drive the scooter on slippery surfaces or on slopes over 6 degrees limit. 3. Do not drive on highway, crowded roads, or unfamiliar areas. 4. Do not turn at high speed in either forward or reverse. 5. Do no wash with water or leave scooter in humid environment since water can damage the electronic parts.		
2	Do not hang baggage or other objects on the tiller / tiller adjustment lever.	6	REF Model Number MD Medical Device SN Serial Number Date of Manufacture Manufacturer Importer C REP EU Authorized representative WEEE Conformity Consult Instructions for Use UK CA UK Conformity Assessed Warning UKRP UKRP CE European Conformity Max: Maximum weight capacity
3	The scooter is not intended to be used as a seat in a motor vehicle.		
4	Tie-down points of the scooter. Do not sit or stay on the scooter during transporting.		
5	N-D Lever Adjustment label which instructs freewheel mode operation. (see section 5-1 for operation)	7 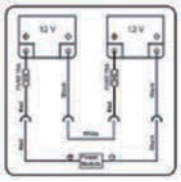	Wiring diagram Label

3. IDENTIFICATION OF PARTS

3.1 SCOOTER

Figure 3

Figure 4

NO.	ITEM
01	Control Panel
02	Front Turning Signal
03	Charging Port
04	Front Basket
05	Headlight
06	Tie-down Hook
07	Reflector
08	Seat Fore-Aft Adjustment Lever
09	Seat Swivel Lever
10	Throttle
11	Rear Mirror
12	Tiller Angle Adjustment
13	Key Switch
14	Front / Rear Wheels
15	Anti-Tipper
16	Tail light / Rear Turning Signal / Stop Lamp
17	N-D Lever
18	Adjustable Armrest (Width)
19	Captain Seat

*Above is only for reference

3.2 CONTROL PANEL

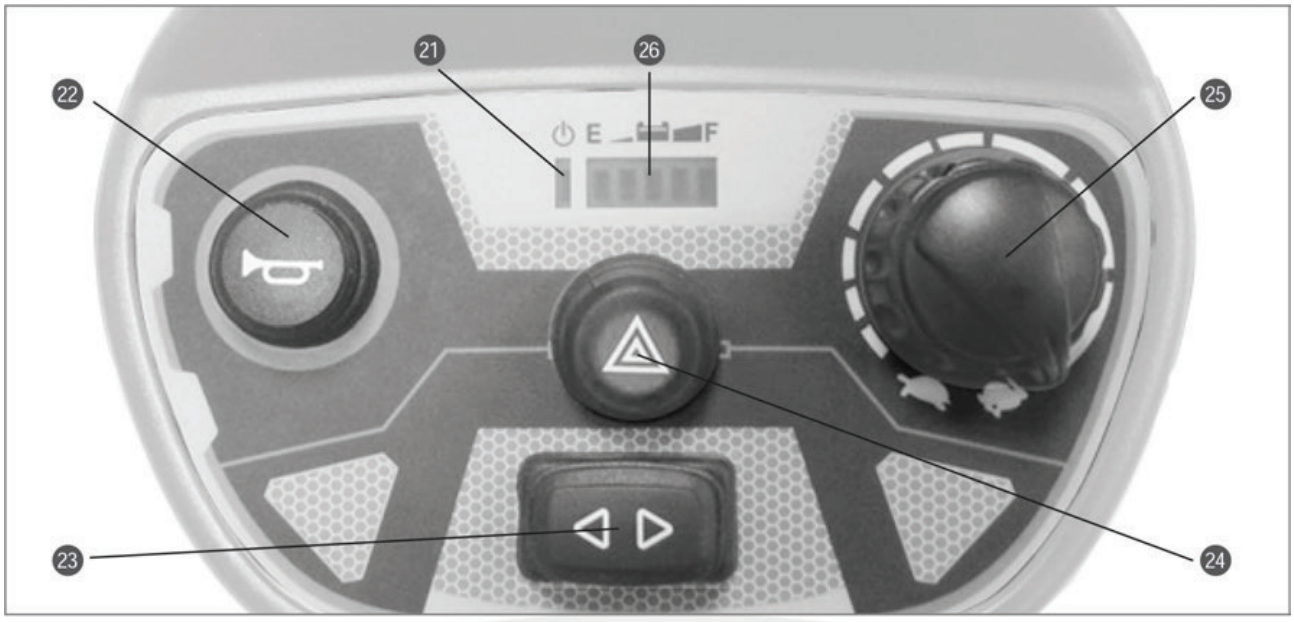

Figure 5 - Vega RS8 Control Panel

NO.	ITEM	FUNCTION
21	Power/Self-Diagnostic Warning light	Power on / Error code
22	Horn	Press for warning sound
23	Left /Right Turning Signal	Switch on for left/ right turn
24	Hazard Signal	Press for Hazard on
25	Speed Dial Knob	Adjust the scooter speed
26	Battery Gauge	Battery charge display

4. OPERATING YOUR SCOOTER

4.1 GENERAL OPERATION

Main Key Switch / Headlight:

- » Turn the key to the right - Turn scooter on. (Figure 6)
- » Turn the key to the left - Turn scooter off
- » By turning the key to [≡D] to turn on the head light.

Figure 6

- » Always ensure that the scooter is switched off before getting on or off the scooter and before removing any items of the scooter
- » Turning the scooter OFF whilst driving will bring the scooter to an abrupt stop and danger.

Sleep Mode:

- » Scooter will go into Sleep Mode with one long beep warning sound if no throttle activity is detected for programmable time period. (Default programmable time is 30 mins.)
- » When scooter is in Sleep Mode, the Power/Self-Diagnostic warning light on the control panel will be off, and the scooter will not respond to commands.
- » To wake up the scooter, turn the power (key) off and then on again.

Speed Dial Knob:

The Rabbit means fast and Turtle means slow.

- » The dial knob allows you to adjust the speed of you scooter. (Figure 7)

Do not set the speed at maximum when operating the scooter. Adjust the speed at maximum when inclining a slope, and adjust to minimum speed when declining.

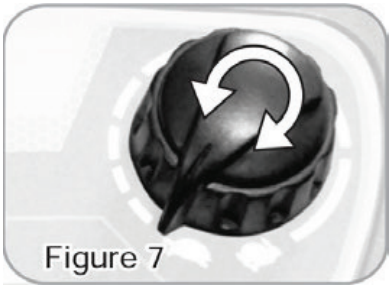

Figure 7

Turning Signal:

Press down at left side to turn on the left turning signal.
Press down at right side to turn on the right turning signal. (Figure 8)

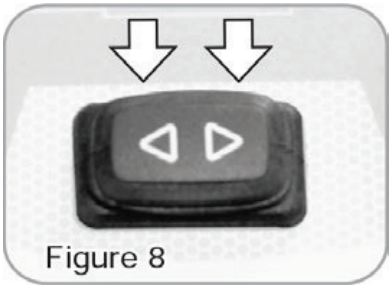

Figure 8

Headlight:

- » By turning the key to [≡D] to turn on the head light. (Figure 9)
- » Turn the key back to ON, the headlightis off.

Horn:

Press down the button to sound buzzer. (Refer Section 3-2)

Throttle:

- Pull the right throttle to move scooter forward. /Pull the left throttle to move scooter backward. This can be reserved if required by local dealer. (Figure 10)
- These are also your accelerator. The further you depress them, the faster you go. (Subject to the position of speed control)
- Releasing both left/right throttles automatically operates the brakes to slow down and stop.

  Stop lamps will be activated and have steady red lights on for 5 seconds. (Figure 10)

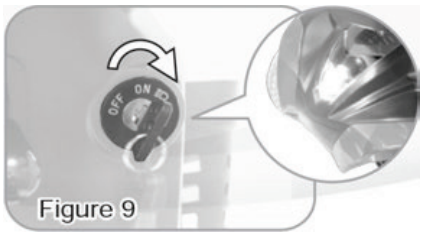

Figure 9

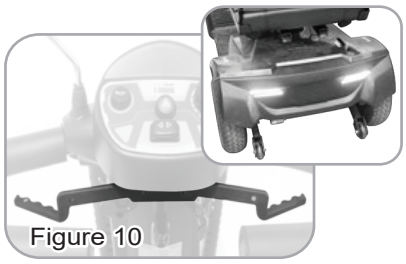
Figure 10

Tiller angle adjustment:

- Pull the tiller adjustment downwards to adjust tiller's angle and release to lock at a desired comfortable position. (Figure 12)

- Do not pull both right and left throttle at the same time, you might not able to control the scooter.
- Always ensure the scooter is switched off before getting on or off the scooter.

Seat Swivel Adjustment:

- Pull the swivel lever upwards to rotate seat left and right. (Figure 13)

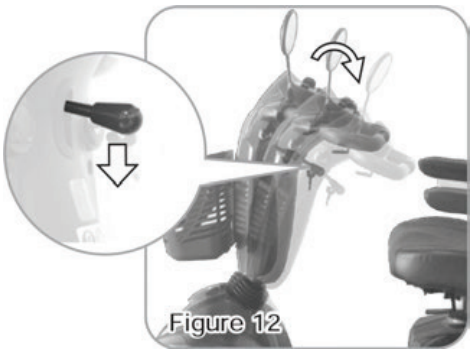
Figure 12

Figure 13

Seat length Adjustment:

- Set at a comfortable position by lifting lever forward to adjust the seat. (Figure 14)

Armrest angle, height, and width adjustment:

- **Angle:** rotate the screw as picture to adjust the most comfortable armrest angle. (Figure 15)
- **Width:** Loosen the thumbscrews as picture to adjust the width, tighten again to lock at a desired position. (Figure 16)
- Pull the armrest up when getting on or off the scooter.

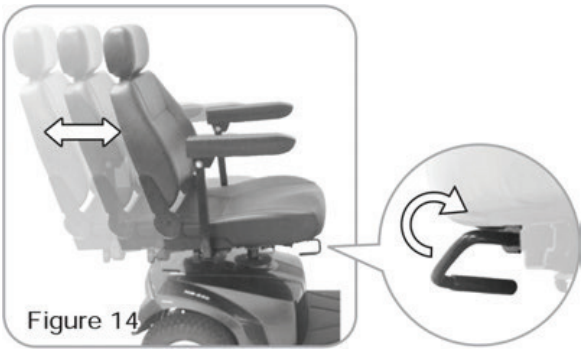
Figure 14

When driving the scooter, set the seat at foremost position to prevent tip over.
Do not hang heavy goods on the armrests.

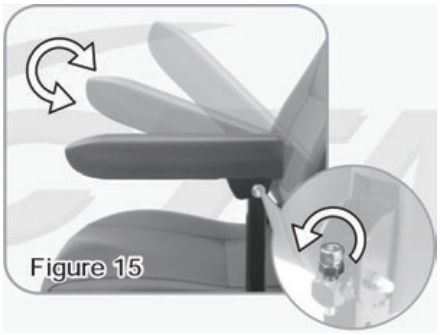
Figure 15

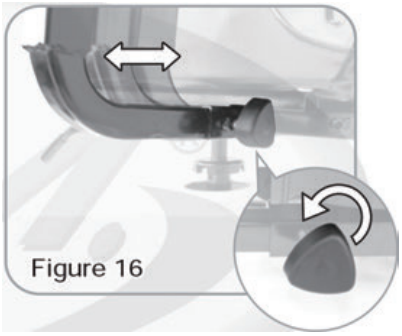
Figure 16

4.2 FREE-WHEELING (N-D LEVER)

- When lever is in Neutral (N) position, scooter can be moved manually without power. (Figure 17-2)
- When lever is in Drive (D) position, scooter can be driven. Normal position is D. (Figure 17-1)

Freewheel operation is only recommended on flat surfaces. Never leave your scooter on gradient with its motors disengaged.
When adjusting N-D lever, do not sit on the scooter. It's not able to drive the scooter when the lever is in Neutral. You must turn off the scooter first and switch to D lever, then turn on and drive scooter.

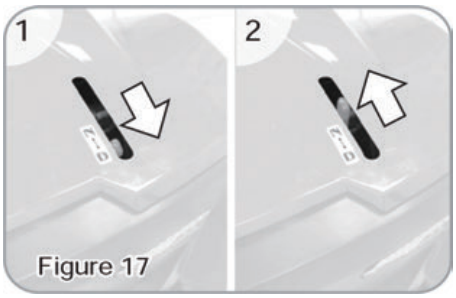

Figure 17

4.3 TIE-DOWN HOOKS

- To ensure safety during the transportation. There are four fixed hooks for fixing scooter on other vehicles.
- Make sure the scooter's N-D lever is in D position when transporting. (Figure 18)
- Do not sit on the scooter during transportation.

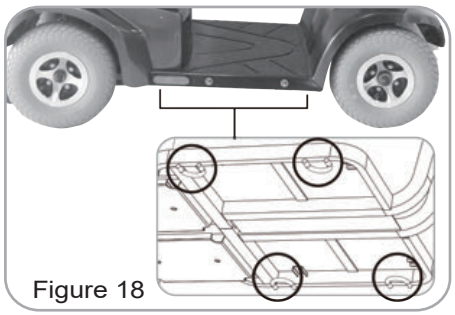
Figure 18

4.4 DISASSEMBLING YOUR SCOOTER

Disassembling seat:

- By lifting lever to remove seat upwards. (Figure 19)

Rear Compartment cover:

- Open the compartment cover upwards according to the example. (Figure 20)

Disassembling front basket:

- Lift the front basket upwards. (Figure 21)

Do not turn on the scooter when disassemble/assemble the scooter, and make sure the scooter is in D position. Do not modify or change the scooter with non-authorized parts or accessories.

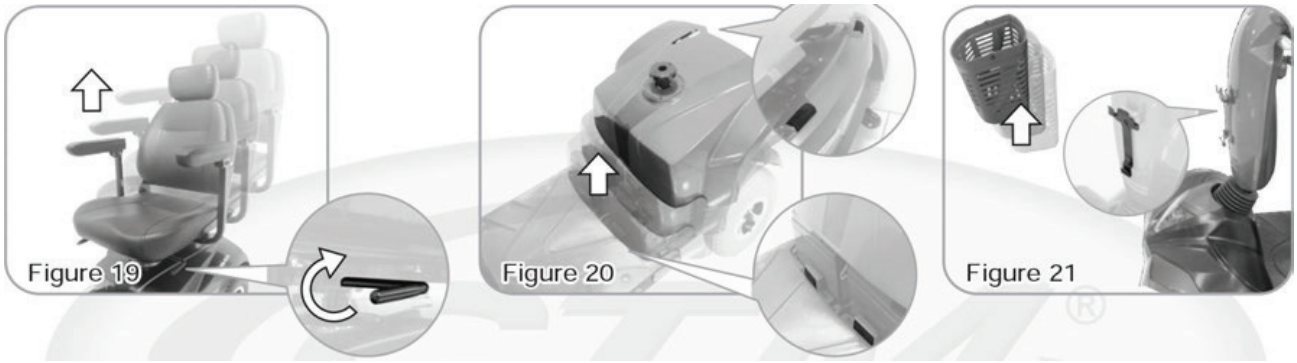

4.5 DISASSEMBLING BATTERIES

» Release the battery velcro straps and disconnect the battery connectors to remove the batteries. (Figure 22~27)

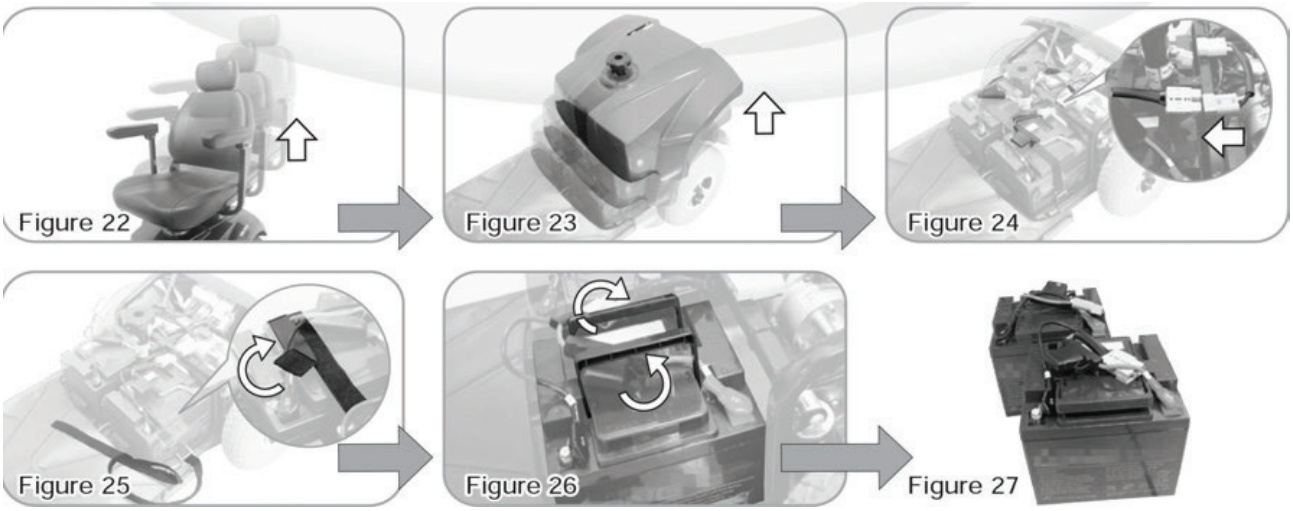

» Batteries are heavy, be careful when removing the batteries.
» Do not connect battery terminal [+] [-] with any metals to avoid danger.
» Connect the red terminal to red, blue terminal to blue.
» When replacing the batteries remove the screws and connectors in sequence and tighten each component back.
» Maintenance & repair must only be carried out by a competent engineer or authorized dealer.

5. CHARGING THE BATTERIES

5.1 CHARGING INFORMATION

AC Input:100-240Vac, 50-60Hz, 2.2-1.1A

DC Output:24V Rated

Operating temperature:0°C~40°C (30°F~104°F)

Model	PF2405SL
DC Output (Max)	5A

IMPORTANT SAFETY INSTRUCTIONS

1. Before use of the battery charger, please make sure to read and follow all safety instructions.
2. This appliance is not intended for use by persons (including children) with reduced physical, sensory or mental capabilities, or lack of experience and knowledge, unless they have been given supervision or instruction concerning use of the appliance by a person responsible for their safety.
3. Children should be supervised to ensure that they do not play with the appliance.
4. Failure to follow the warnings and instructions may result in electric shock, fire and/or serious injury. Save all safety warnings and instructions for future reference.
5. For indoor use only, do not expose to rain, snow or damp conditions.
6. Check that there is no sign of damage to the case, cables and socket before using the charger. Contact your authorised dealer in the event of any damage.
7. Contact your authorised dealer if you are unsure of how to operate the charger.
8. The charger must be placed in a well ventilated area to protected from direct sunlight and inflammable surfaces, paper textiles etc.
9. To reduce the risk of fire hazard, do not cover or obstruct the ventilation holes on the charger.
10. Keep the charger our of children's reach.
11. Charge only 24V lead acid or Gel cell type rechargeable batteries.
12. Before each use, check the battery charger, cable and plug. If damage is detected, do not use the battery charger. Never open the battery charger yourself. Have repairs performed only by a qualified technician.
13. Disconnect the AC input supply before plugging or unplugging the connections to the battery.
14. Unplug both of the DC output and the AC input power cord of the charger when the batteries are fully charged.
15. It is normal for the charger to be warm to the touch and the temperature may exceed 41 degrees Celsius during the boost charging process. Do not make prolonged skin contact with the charger while charging.
16. To properly use the battery charger first connect DC output plug of the charger with the charging port of the unit. Then connect AC plug on the charger into AC power outlet.

5. CHARGING THE BATTERIES

17. The charger is supplied with a polarized plug. The charging plug must not be dismantled or modified.
18. Warning! Risk of electric shock. Do not attempt to open or modify this charger in any way. No user serviceable parts inside.
19. Warning! Explosive gases. Prevent flames and sparks. Provide adequate ventilation during charging.
20. For normal use, the charger requires no maintenance over and above general cleaning, which requires a soft cloth, which may be damp if necessary.
21. Power Cord EU (European Union) version: A certified power cord set must be used with this equipment. The relevant national installation and or equipment regulations shall be considered. A certified power supply chord not lighter ordinary polyvinyl chloride flexible cord according to 60227 IEC 52 (designation H03VV-F) shall be used. Alternatively, a flexible cord be of synthetic rubber according to 60245 IEC 53 (designation H05RR-F) shall be used. Power supply cord with conductors providing a cross-sectional area of 3G, 0.75mm2 minimum.
22. Power Cord USA and Canada version: A UL Certified grounding-type attachment plug rated 125 volts, 15 amp fitted with cord type SJT, SP-2, SPE-2, SV, SVE or SVT, with 18 AWG minimum has et be used with this equipment. Length of power supply cord 1.8m – 3m required.

Indicator Functions:	With bi-coloured LED light Flash-rapid Red = Faulty Flash Red = Standby Solid Red = Charging Solid Green = Fully Charged Yellow = Power

Explanation of symbols labelled on the charger:

Warning! | Read the instructions | For indoor use only

Service & repairs may only be carried out by authorised person. | Avoid naked flames and sparks

Caution, hot surface | Alternating current | Direct current

EN60335-2-29
EN55014 Class B

AS/NZS 60335.2.29
AS/NZS CISPR 14.1.2010

ANSI/AAMI ES60601-1:2005/R:2012-8
CAN/CSA-C22.2 NO.60601-1:2014
EN60601-1:2006/A1:2013

6. CARE AND MAINTENANCE

6.1 DAILY CHECK

Please always check your scooter before you start your every journey.

Check point	Inspection	Ref.	What to do if the inspection is failed
N-D lever	Check for correct function.	P.12	Contact your dealer.
Horn	Check for correct function.	P.10	Contact your dealer.
Throttles	Pull the wigwag to test the scooter movement.	P.10	Contact your dealer.
Electromechanical brake and Emergency hand brake	Pull the wigwag a little bit and release it to test if brake works. If your scooter comes with emergency handbrake, please check it as well.	P.10	Contact your dealer.
Battery Gauge	Check if the battery gauge is displayed and whether it is at low power.	P.13	» Contact your dealer if battery gauge is not working. » Recharge the battery immediately if low
Rear mirror (s)	Check if the parts are clean and firmly tighten to the scooter and do not wobble.	P. 8	» Clean up the dirt by damp cloth. » Tighten the screw or clamping stem that holds the mirror(s)
Lighting	Check if all lights, such as head lights, rear lights, and turn signal are functioning correctly.	P.10	Contact your dealer.

6.2 WEEKLY CHECK

Check point	Inspection	Ref.	What to do if the inspection is failed
Speed Dial Knob	Check for correct function.	P.10	Contact your dealer.
Armrests	Check if the parts are clean and firmly tighten to the scooter and do not wobble. Tighten the screw knob that holds the armrest	P.11	Contact your dealer.
Wheels/Tyres	Inflate the tyre to the correct pressure and check that 1. Drive wheels rotate without wobbling. 2. Tyre tread depth is not less than 0.5mm. 3. No foreign objects in tyres.	P.16	Contact your dealer.
Motor	Check for correct function.	Observe while driving	Contact your dealer.
Battery Charger	Check if the charger is functioning correctly and the batteries are charged.	P.14	Contact your dealer.

6.3 MONTHLY CHECK

Check point	Inspection	Ref.	What to do if the inspection is failed
Seat / Upholstery	Check for movement and if it's worn.	P.11	Contact your dealer.
Electronics	Check if all the battery cables and connectors are firmly tighten to the scooter	P.13	Contact your dealer.

6.4 CLEANING YOUR SCOOTER

» Do not use any abrasive or scouring liquids for cleaning. Only use a damp cloth and gentle detergent.
» Do not use hose pipe or splash water directly onto the scooter as this may cause damage to electronics.
»

6.5 MAINTENANCE

» User should inspect the scooter regularly to keep scooter in good running order.
» Check if the electrical cable connectors are fully connected.
» All maintenance and repair of scooter should be done by an authorized dealer.

Seat Upholstery:

Only use damp cloth and a little soap to wipe the seat. Do not use abrasive cleaners as this will damage the seat.

Storage:

» Please store the scooter in a dry location. If store the scooter in long time, please disconnect the battery terminals.
» Do not store your scooter where it will be exposed to source of direct heat, damp, oil, acid, alkaline, or where Ozone could be possibly generated. All of the above will minimize scooter / tyre cycle and shorten its lifetime.

Tyre:

User should inspect the tyres frequently for damage, the presence of foreign bodies, unusual wear and sufficient tread depth. If replacement tyres are needed, please contact the nearest dealer.

The following areas require periodic inspection:

» Tyre pressure between 35-40 psi
» Tread depth drops below 0.5 mm

Recommended range of storage:

Temperature : -30oc ~ +50oc, Humidity : 25% ~ 85%

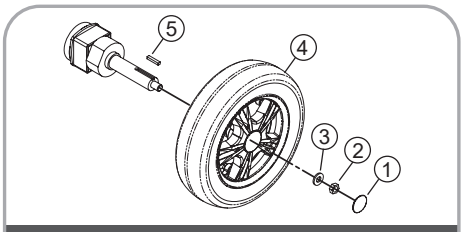

Component 5 is for rear wheel only

Follow these easy steps to replace the tyre :

1. Turn off the scooter and remove the key.
   Make sure the lever is in D position before you lift the scooter.
2. Use an ratchet and socket to remove the drive wheel screw from the centre hub of the wheel. Pull the wheel off of the axle.
3. Separate the tyre from the rim.
4. Remove the old tyre and replace it with a new tyre.
5. Slide the wheel back onto the shaft.
6. Install the drive wheel nut into the centre hub and verify the key is lined up with axle and wheel,then tighten to secure it in place. (Torque 300±30kgf-cm)

All maintenance and repair of scooter should be done by an authorized dealer.

7. OTHER INFORMATION

7.1 RECYCLING & DISPOSAL

- The equipment wrapping is potentially recyclable.
- The metal parts are used for scrap metal recycling. The plastic parts are used for plastic recycling.
- Electric components and printed circuit boards are disposed of as electronic scrap.
- Exhausted or damaged batteries can be returned to your medical equipment supplier.
- Disposal must be carried out in accordance with the respective national legal provisions.
- Ask your city or district council for details of the local waste management companies.

7.2 SERVICE LIFE

We estimate a service life of five years for this product, provided it is used in strict accordance with the intended use as set out in this document and all maintenance and service requirements are met. The estimated service can be exceeded if the product is carefully used and properly maintained, and provided technical and scientific advances do not result in technical limitations. The service life can also be considerably reduced by extreme or incorrect usage. The fact that we estimate a service life for this product does not constitute an additional warranty.

8. TROUBLE SHOOTING

Here are some suggestions about solving problems you may have with your scooter. There is a self-diagnostic warning light on the control panel. To check the self-diagnostic warning light, turn on the key and count the number of blinks on the warning light.

8.1 SCOOTER WON'T MOVE WHEN KEY IN TURNED ON

Check point	Solution
Check if the power is off	Turn the power on.
Check if the N-D lever is in Neutral position	Switch to D (drive) position. Turn off the power and turn on again.
Check if the battery power is enough. (Battery gauge is under 25%)	Recharge the battery and then retest.
Check if the charger power cord is still plugged in scooter	Unplug the charger power cord.

8.2 ERROR CODE

Flash	Description	Initial check points
1	Battery Low	The batteries are running low. » Recharge the batteries.
2	Low Battery Fault	The batteries have run out of charge. » Recharge the batteries. » Check the battery and associated connections and wiring.
3	High Battery Fault	Battery voltage is too high. This may occur if overcharged and/or traveling down a long slope. » If traveling down a slope, reduce your speed to minimize the amount of regenerative charging.
4	Current limit time-out or controller overheat	The motor has been exceeding its maximum current rating for too long. » The scooter may have stalled. Turn the controller off, leave for a few minutes and turn back on again. » The motor may be faulty. Check the motor and associated connections and wiring.
5	Park Brake	Either a park brake release switch is active or the park brake is faulty. » Check the park brake and associated connections and wiring. » Ensure any associated switches are in their correct positions.
6	Drive Inhibit	Either a stop function is active or charger inhibits or OONAPU condition has occurred. » Release the stop condition (seat raised etc.) » Disconnect the battery charger. » Ensure the throttle is in Neutral when turning the controller on. » The throttle may require re-calibration.
7	Speed Pot	The throttle, speed limit pot. SRW or their associated wiring may be faulty. » Check the throttle and speed pot and associated connections and wiring.
8	Motor Voltage	The motor or its associated wiring is faulty. » Check the motor and associated connections and wiring.
9	Other Error	The controller may have an internal fault. » Check all connections and wiring.

8.3 OTHER PROBLEMS

» Tyre : Low tyre pressure: pump up tyres to 35~40 psi.

» Charger : During charging, light on charger doesn't change to green. Please refer to section 5-2.

9. OPTIONS

We offer below options to add functionality for your scooter, please contact the authorized dealer for more information.

Hi / Lo Switch

This enables user to switch speed modes in high speed or low speed.

Handbrake

Safety Turning Speed Reduction (Gyro Meter)

When turning left and right, scooter will reduce the speed itself according turning space to ensure safety.

10. TECHNICAL SPECIFICATIONS

Overall Length	1200 mm / 47.2”
Overall Width	640 mm / 25.2” (Armrest Width)
Overall Height	1155 mm / 45.5”
Front Wheels	290 mm / 11”
Rear Wheels	290 mm / 11”
Weight W/ Batteries	94 kg / 208 lbs
Max. Speed	12 kmph / 7.5 mph
Weight Capacity	136 kg / 300 lbs
Ground Clearance	65 mm / 2.6”
Grade Climbable	10 degree
Curb Climbable	60 mm / 2.4”
Turning Radius	1400 mm / 55.1”
Suspension	Front & Rear
Brake	Electro-Mechanical
Seat Type	Swivel Mid-Back W/ Headrest & Seat Sliding Mechanism
Seat Width	465 mm / 18.3”
Motor Size	700W, 4500 r.p.m
Battery Size	(2) 12V. 50Ah
Battery Weight	30.5 kg / 67.2 lbs
Travel Range	39 km / 24.2 Miles
Battery Charger	5A Off Board
Electronics	On / Off Key Switch, Battery Level Indicator, Speed Control Knob

*Subject to change without notice.

(Rev. 6, 2023/01/11)

10. WARRANTY

There is a comprehensive twelve-month warranty from the date on which your new scooter is delivered. The warranty covers the scooter for repairs or replacement during this period. For more details, please see the warranty conditions below.

Warranty conditions:

» Any work or replacement part installation must be carried out by an authorised service agent.
» To apply to warranty should your scooter require repair, please contact the authorised dealer.
» Should any part of the scooter require repair or full or part replacement, as a result of a manufacturing or material defect within warranty period, the work will be carried out free of charge. Warranty period:

1. Frame: 2 year limited warranty.
2. Electronic parts: 12 months limited warranty.
3. Batteries: 6 month limited warranty.

» Any repaired or replaced parts will be covered by this warranty for the balance of the warranty period on the scooter.
» Consumable items supplied will not generally be covered during the normal warranty period unless such items require repair or replacement clearly as a direct result of a manufacturing or material defect. Such items include (among others): upholstery, tyres and batteries.
» The above warranty conditions apply to brand new scooters purchased at the full retail price. If you are unsure whether your scooter is covered, check with the authorised dealer.
» Under normal circumstances, no responsibility will be accepted where the scooter has failed as a direct result of:

1. The scooter part not having been maintained in accordance with the manufacturer's recommendations.
2. Failure to use the manufacturer's specified parts.
3. The scooter or part having been damaged due to neglect, accident or improper use.
4. The scooter or part having been altered from the manufacturer's specifications or repairs having been attempted before the service agent is notified.

Please note your authorised dealer contact details on page 3. In the event of your scooter requiring attention, contact them and give all relevant details so they can act quickly. The manufacturer reserves the right to alter, without notice, any weights, measurements or other technical data shown in this manual. All figures, measurements and capacities shown in this manual are approximate and do not constitute specifications.

NOTES

NOTES

NOTES

VEGA RS8

CareCo